# PLANS FOR THE INSTALLATION OF FIBER OPTIC FACILITIES:
# SHELTON RD TO N SHELTON RD, LINDEN CA

## GENERAL NOTES

1. ALL CONSTRUCTION FROM THESE PLANS WITHIN THE STATE RIGHT-OF-WAY SHALL CONFORM TO THE STATES 2010 STANDARD SPECIFICATIONS AND STANDARD PLANS, 2010 CALIFORNIA MUTCD, AND/OR AS DIRECTED BY THE STATE REPRESENTATIVE.

2. THE CONTRACTOR SHALL VERIFY AND BE RESPONSIBLE FOR COORDINATION OF THE FOLLOWING ITEMS RELATED TO THE NEW INSTALLATION:
   A. ALL CONTROLLING FIELD DIMENSIONS, BEFORE ORDERING OR FABRICATION CONSTRUCTION MATERIAL.
   B. ALL DIMENSIONS AND CONDITIONS AT THE SITE, NOTIFYING THE ENGINEER OF ANY DISCREPANCIES WITH THE PLANS, PRIOR TO THE START OF THE CONSTRUCTION.
   C. ANY CONDITIONS WHICH IN THE CONTRACTOR'S OPINION MIGHT ENDANGER THE STABILITY OF ANY STRUCTURE, ADJACENT IMPROVEMENTS AND/OR PUBLIC PROPERTY.
   D. THE LOCATION AND PROTECTION OF EXISTING UTILITIES IN THE VICINITY OF THE PROJECT. THE CONTRACTOR SHALL EXAMINE THE JOB SITE TO DETERMINE WHICH UTILITIES MAY BE AFFECTED BY THIS CONSTRUCTION.
   E. THE LOCATION AND PROTECTION OF ALL CONDUITS INTERFERING WITH THE NEW INSTALLATION.
   F. THE PROPER ALIGNMENT OF THE NEW INSTALLATION.

3. THE CONTRACTOR SHALL DESIGN, OBTAIN THE REQUIRED PERMITS, FURNISH AND INSTALL ALL THE TEMPORARY SHORING, UNDERPINNING AND BRACING REQUIRED TO SAFELY EXECUTE THE WORK AND PROTECT PUBLIC PROPERTY AND EXISTING IMPROVEMENTS. THE CONTRACTOR SHALL PROVIDE AND INSTALL APPROPRIATE SIGNS AND ADEQUATE WARNING DEVICES TO ADVISE THE PUBLIC OF CONSTRUCTION HAZARDS AND SHALL REMOVE ALL SUCH SIGNS AND DEVICES UPON COMPLETION OF WORK.

4. THE CONTRACTOR SHALL ASSUME SOLE AND COMPLETE RESPONSIBILITY FOR THE JOB SITE CONDITIONS DURING THE COURSE OF THE PROJECT THIS REQUIREMENT IS NOT LIMITED TO THE NORMAL WORKING HOURS,. THE CONTRACTOR SHALL INDEMNIFY AND HOLD CALTRANS AND THE DESIGN ENGINEER HARMLESS FROM ANY AND ALL LIABILITY, REAL OR ALLEGED, IN CONNECTION WITH THE PERFORMANCE OF THE CONTRACTOR'S WORK ON THIS PROJECT.
5. THE DESIGN ENGINEER DOES NOT WARRANT THE ACCURACY OF SCALED DIMENSIONS. ALL DIMENSIONS SHALL BE AS DESIGNATED ON THE PLANS.

6. BEFORE COMMENCING ANY EXCAVATION THE CONTRACTOR SHALL OBTAIN AN UNDERGROUND SERVICE ALERT INQUIRY I.D. NUMBER BY CALLING 1-800-422-4133. TWO WORKING DAYS SHALL BE ALLOWED AFTER THE I.D. NUMBER IS OBTAINED AND BEFORE THE EXCAVATION WORK IS STATED SO THAT THE UTILITY OWNERS CAN BE NOTIFIED. THE I.D. NUMBER MUST BE REPORTED WHEN CALLING FOR INSPECTION. THE I.D. NUMBER WILL NOT BE ISSUED MORE THAN 14 DAYS PRIOR TO THE STATING OF EXCAVATION WORK.

7. ALL CONSTRUCTION SHALL CONFORM TO THE SAFETY REQUIREMENTS OF THE STATE OF CALIFORNIA DIVISION OF INDUSTRIAL SAFETY. NO TRENCHES OR EXCAVATIONS 5 FEET OR MORE IN DEPTH INTO WHICH A PERSON IS REQUIRED TO DESCEND SHALL BE SUBJECT TO ALL SAFETY REQUIREMENTS FROM CAL/OSHA.

8. ALL DEBRIS AND CONSTRUCTION MATERIAL SHALL BE REMOVED FROM THE SITE AT THE END OF THE WORK.

9. ALL TRAFFIC CONTROL SHALL BE IN CONFORMANCE WITH 2010 CALIFORNIA MUTCD, DATED 01/21/2010.
10. IF ANY DAMAGE IS CAUSED BY THE CONTRACTOR'S OPERATION, HE SHALL, AT HIS OWN EXPENSE, REPAIR OR REPLACE DAMAGED FACILITIES PROMPTLY AND IN ACCORDANCE WITH STATE SPECIFICATIONS AND/OR AS DIRECTED BY THE STATE REPRESENTATIVE.

11. ALL ROADWAY FEATURES (SIGNS, PAVEMENT DELINEATION, ROADWAY SURFACE, RIGHT-OF-WAY FENCE, ETC.) WITHIN THE STATE RIGHT OF WAY MUST BE PROTECTED, MAINTAINED IN A TEMPORARY CONDITION, OR RESTORED.

12. ALL TRENCHES AND EXCAVATIONS MUST BE BACK FILLED OR STEEL PLATED OUTSIDE THE WORKING HOURS TO RESTORE TRAFFIC TO NORMAL CONDITIONS.

CAL - TEL

VICINITY MAP
N.T.S.

## CONSTRUCTION NOTES

1. ADSS FIBER OPTIC CABLE TO BE FURNISHED BY OWNER AND INSTALLED BY THE CONTRACTOR. CABLE MANUFACTURED BY OFS - CUSTOMER SERVICE (888) 342-3743 WWW.OFSOPTICS.COM

2. CONTRACTOR SHALL FURNISH ALL ASSOCIATED AERIAL INSTALLATION HARDWARE FOR ADSS CABLE. HARDWARE AVAILABLE THROUGH APPROVED VENDOR "PREFORMED LINE PRODUCTS" - CUSTOMER SERVICE (440) 461-5200 WWW.PREFORMED.COM

3. CONTRACTOR MUST VERIFY ALL SAGGING AND TENSIONING REQUIREMENTS PRIOR TO PERFORMING WORK

4. 36"x60"x36" PULL BOX SHALL BE FURNISHED BY OWNER AND INSTALLED BY CONTRACTOR.

5. CONTRACTOR WILL PERFORM REEL TEST OF ALL 144 FIBERS AT CALTEL YARD BEFORE F.O.C. IS INSTALLED. TESTING DOCUMENTATION MUST BE DELIVERED WITHIN 24HRS UPON COMPLETION OF REEL TESTING.

6. CONTRACTOR WILL PERFORM POST PLACEMENT TESTING OF ALL 144 FIBERS AFTER F.O.C. HAS BEEN INSTALLED. TESTING DOCUMENTATION MUST BE DELIVERED WITHIN 24HRS UPON COMPLETION POST PLACEMENT TESTING.

7. CONTRACTOR WILL PERFORM REEL TEST OF ALL 144 FIBERS AT CALTEL YARD AFTER F.O.C. IS DELIVERED. TESTING DOCUMENTATION MUST BE DELIVERED WITHIN 24HRS UPON COMPLETION OF REEL TESTING.

## DRAWING INDEX


| SHEET | TITLE |
|---|---|
| 1 | COVER SHEET |
| 2-5 | CONSTRUCTION DRAWINGS |
| 6-7 | DETAIL SHEET |
| 8 | TYPICAL TRAFFIC CONTROL |


## LEGEND

| | | | | | | | |
|---|---|---|---|---|---|---|---|
| | JOINT POLE | XXX' | STRAND FOOTAGE | | MANHOLE VAULT | | EXISTING SLACK |
| | TRANS POLE | | SNOWSHOE | | DEAD END POLE | | PROPOSED SLACK |
| | POWER POLE | | POLE COUNT | | DBL DEAD END POLE | | SPLICE POINT |
| | JOINT TRANS POLE | | EX. ANCHOR | | TANGENT POLE | | |
| | SUBSCRIBER | | NEW ANCHOR | | ANGLE POLE | | |
| OH | AERIAL (144 ct) | | CENTER LINE | | RISER | | |
| | OPEN TRENCH | | PEDESTAL | | PULL BOX | | |
| | DIRECTIONAL BORE | | DROP | | | | |

DIGALERT
Call: TOLL FREE
(811)
AT LEAST TWO DAYS BEFORE YOU DIG
UG SERVICE ALERT OF NORTHERN CALIFORNIA

CAL - TEL


BYERS ENGINEERING COMPANY
4780 CHABOT, SUITE 104
PLEASANTON, CA 94588
(925) 398-6010


| DESIGN | DRAWN | DESCRIPTION | REV | DATE |
|---|---|---|---|---|
| J.C. | RLM | FOCA SECTION THROW | | 06/27/14 |
| | | | | |
| | | | | |
| | | | | |

PROJECT: CAL-TEL FIBER REPLACEMENT SECTION
ADDRESS: SHELTON AND WIMER RDS. TO SHELTON RD.
AND LAWSON DR. SAN JOAQUIN / CALAVERAS COUNTY
CONSTRUCTION TYPE: AERIAL FIBER CONSTRUCTION
SITE: SAN JOAQUIN
SHEET: 1 of 8

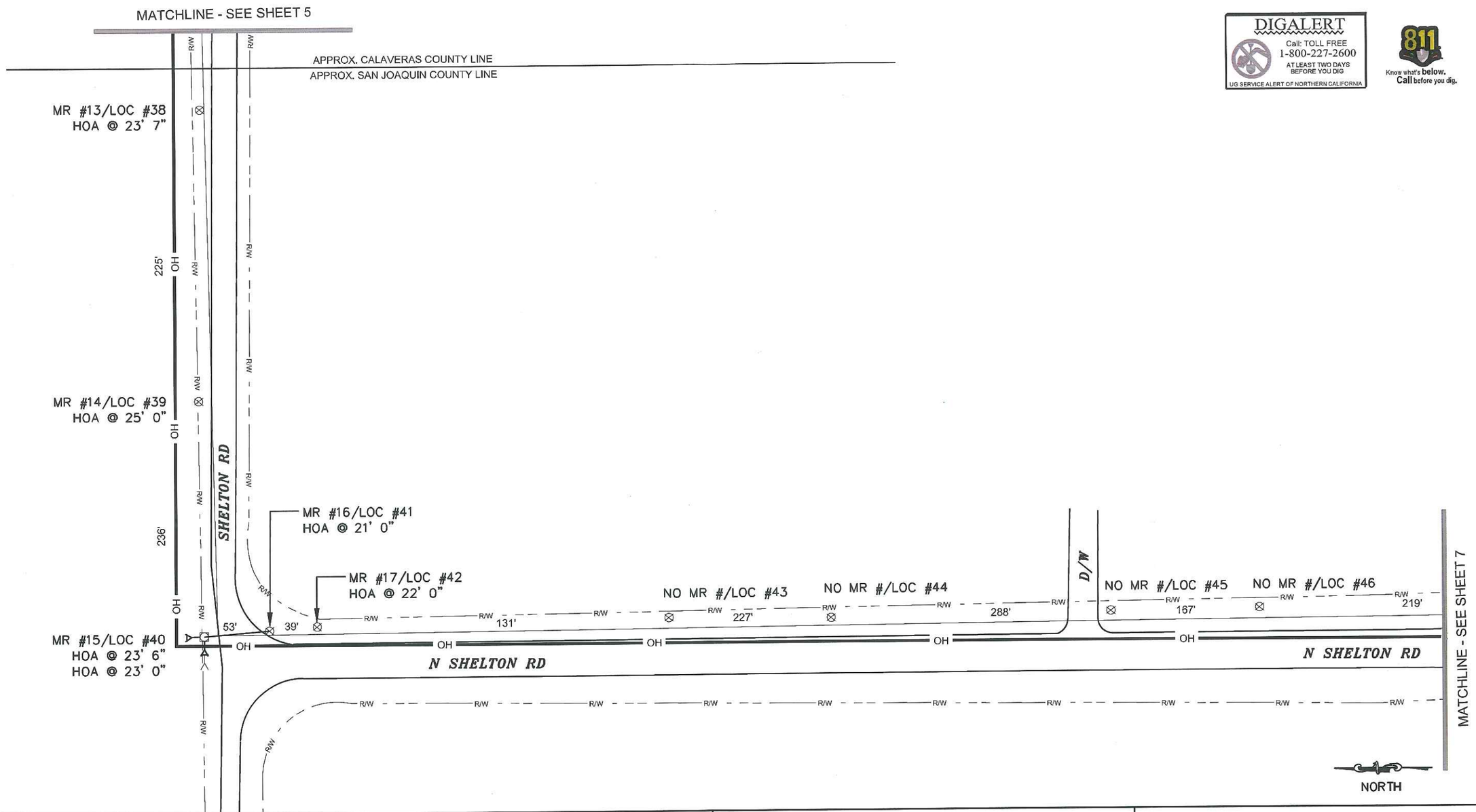


DIGALERT
Call: TOLL FREE
1-800-227-2600
AT LEAST TWO DAYS BEFORE YOU DIG
UG SERVICE ALERT OF NORTHERN CALIFORNIA

811
Know what's below.
Call before you dig.

CAL - TEL

BYERS ENGINEERING COMPANY
4780 CHABOT, SUITE 104
PLEASANTON, CA 94588
(925) 398-6010

| DESIGN | DRAWN | DESCRIPTION | REV | DATE |
|---|---|---|---|---|
| J.C. | D.A. | FOCA SECTION THROW | | 06/03/14 |

PROJECT: CAL-TEL FIBER REPLACEMENT SECTION
ADDRESS: SHELTON AND WIMER RDS. TO SHELTON RD.
AND LAWSON DR. SAN JOAQUIN / CALAVERAS COUNTY
CONSTRUCTION TYPE: AERIAL FIBER CONSTRUCTION
SITE: SAN JOAQUIN
SHEET: 4 of 8

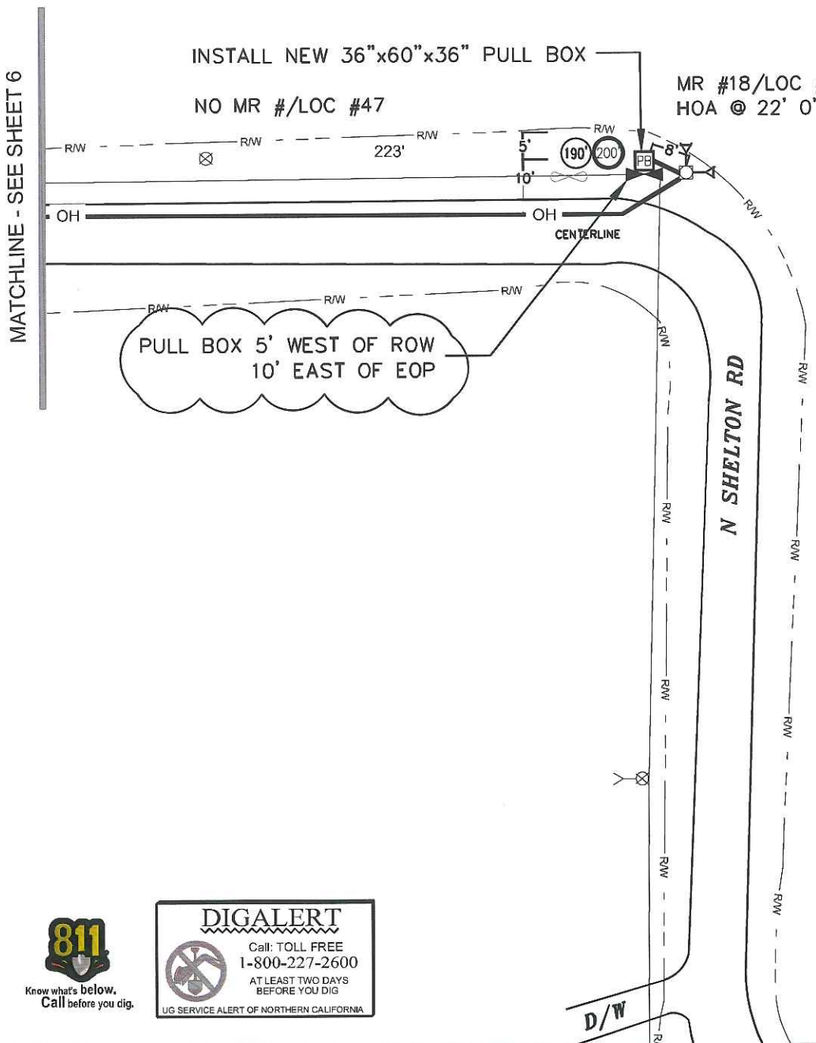


NOTE:
-INSTALL (N) 36"x60"x36" PULL BOX (PULL BOX WILL BE FURNISHED BY OWNER)
-INSTALL 4" PVC CONDUIT FROM 36"x60"x36" PULL BOX TO POLE #18
-PLACE 4" U-GUARD ON POLE #18
-200' OF SLACK IN 36"x60"x36" PULL BOX
-ALL (E) AERIAL SLACK WILL NOW BE STORED IN PULL BOX

CONTRACTOR WILL PERFORM ALL "HOT CUT" SPLICING AND TESTING.

Know what's below. Call before you dig.

DIGALERT
Call: TOLL FREE
1-800-227-2600
AT LEAST TWO DAYS BEFORE YOU DIG
UG SERVICE ALERT OF NORTHERN CALIFORNIA

NORTH

CAL - TEL

BYERS ENGINEERING COMPANY
4780 CHABOT, SUITE 104
PLEASANTON, CA 94588
(925) 398-6010

| DESIGN | DRAWN | DESCRIPTION | REV | DATE |
|---|---|---|---|---|
| J.C. | RLM | FOCA SECTION THROW | | 06/27/14 |
| J.C. | RLM | PULL BOX DIMENSIONS | | 06/27/14 |
| | | | | |
| | | | | |

PROJECT: CAL-TEL FIBER REPLACEMENT SECTION
ADDRESS: SHELTON AND WIMER RDS. TO SHELTON RD.
AND LAWSON DR. SAN JOAQUIN / CALAVERAS COUNTY
CONSTRUCTION TYPE: AERIAL FIBER CONSTRUCTION
SITE: SAN JOAQUIN
SHEET: 5 of 8

| Dist | County | Route | Post Mile | Sheet No. | Total Sheets |
|---|---|---|---|---|---|
| 10 | SJO | 26 | 3.7/15.0 | 6 | 44 |

## RISER POLE
TYPICAL DETAIL

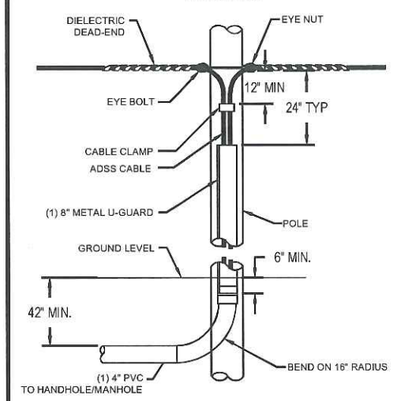


## FIBER MARKER
N.T.S.

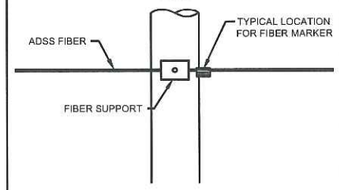


NOTE: FIBER MARKER TO BE FURNISHED BY OWNER AND INSTALLED BY CONTRCTOR AT EACH POLE.

APPROX. WT. = 1,275 LBS

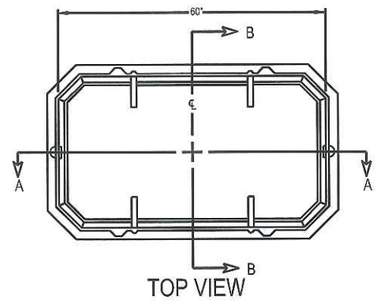


TOP VIEW

FRONT VIEW - RPM ADAPTOR

TOP VIEW
CAST IRON FRAME

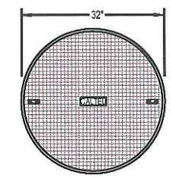


TOP VIEW

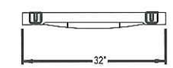


32" C.I. COVER

VIEW C

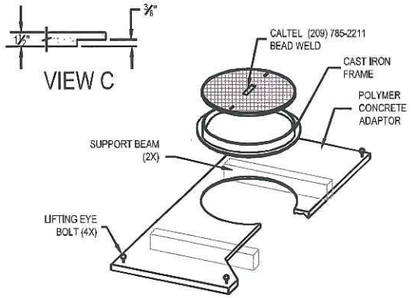


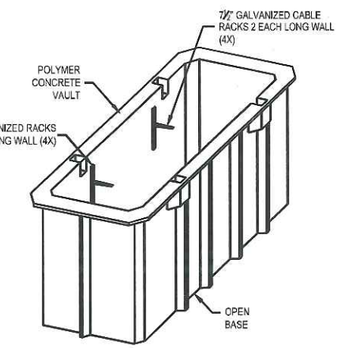


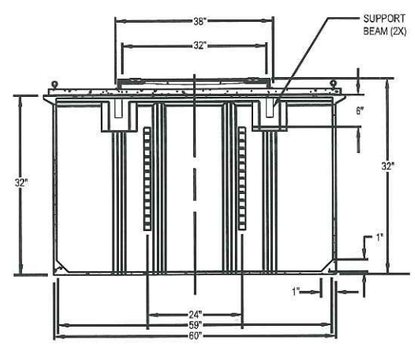


SECTION A - A

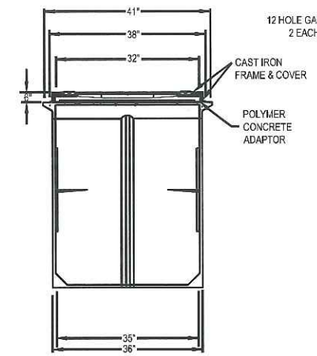


SECTION B - B

1. COMPACT AND LEVEL THE BOTTOM OF THE EXCAVATION
2. PLACE 4" TO 8" INCH LAYER OF TAMPED CRUSHED AGGREGATE BASE.
3. POUR 6" THICK CONCRETE FLOOR (MIN. 3500 PSI CONCRETE) OVER AGGREGATE BASE.
4. PLACE THE OPEN BOTTOM VAULT ON THE WET CONCRETE TO EMBED VAULT FLANGES 3" INTO THE FRESH CONCRETE.
5. BACKFILL AROUND THE VAULT, UP TO THE FINISHED GRADE WITH SAND CEMENT SLURRY (MIN. 1 SACK)
6. BACKFILL IN EVENLY DISTRIBUTED 12" LIFTS AND COVER THE FULL LENGTH AND WIDTH OF THE ENTIRE AREA TO BE FILLED BEFORE THE NEXT LAYER OF MATERIAL IS PLACED.
7. ALLOW CONCRETE FLOOR AND SLURRY BACKFILL TO CURE BEFORE LOADING VAULT.

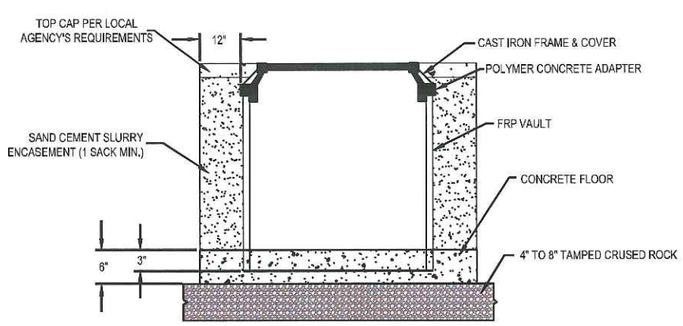


CROSS SECTION
N.T.S.

## DIRT TRENCH DETAIL
N.T.S.

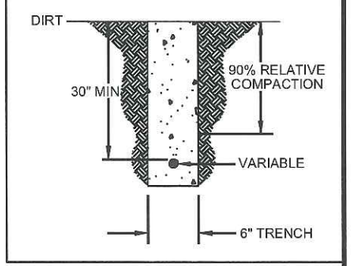


ARMORCAST

## 36" X 60" X 36" POLYMER MANHOLE ASSEMBLY W/BASE
N.T.S.

DIGALERT
Call: TOLL FREE
1-800-227-2600
AT LEAST TWO DAYS BEFORE YOU DIG
UG SERVICE ALERT OF NORTHERN CALIFORNIA

CAL - TEL

BYERS ENGINEERING COMPANY
4780 CHABOT, SUITE 104
PLEASANTON, CA 94588
(925) 398-6010

| DESIGN | DRAWN | DESCRIPTION | REV | DATE |
|---|---|---|---|---|
| J.C. | D.A. | FOCA SECTION THROW | | 06/03/14 |
| | | | | |
| | | | | |
| | | | | |

PROJECT: CAL-TEL FIBER REPLACEMENT SECTION
ADDRESS: SHELTON AND WIMER RDS. TO SHELTON RD.
AND LAWSON DR. SAN JOAQUIN / CALAVERAS COUNTY
CONSTRUCTION TYPE: AERIAL FIBER CONSTRUCTION
SITE: SAN JOAQUIN
SHEET: 6 of 8

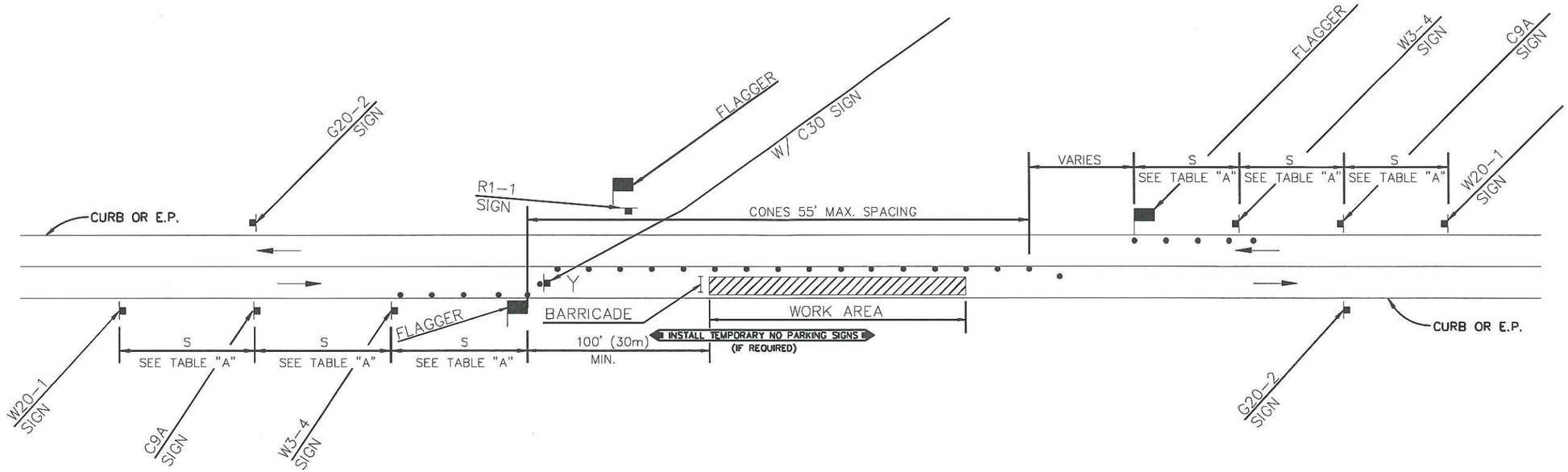


LEGEND

- TYPE III BARRICADE W/SIGN
- TYPE II BARRICADE W/O SIGN
- CHANNELIZING DEVICE
- TRAFFIC CONE WITH CLIP ON SIGN
- SIGN
- (S) SIGNALIZED INTERSECTION
- ARROW PANEL (FLASHING ARROW) (WHERE REQUIRED)
- HIGH LEVEL WARNING DEVICE (FLAGTREE) (OPTIONAL)
- FLAGGER
- TANS TOW AWAY NO STOPPING ___ TO ___ (SHOW HOURS)
- TANSAT TOW AWAY NO STOPPING ANY TIME
- WORK ZONE (ACTIVITY AREA) LIMITS
- DIRECTION OF TRAFFIC (NOT PAVEMENT MARKING)
- (A) ROADWAY DESIGNATION (A THROUGH D)

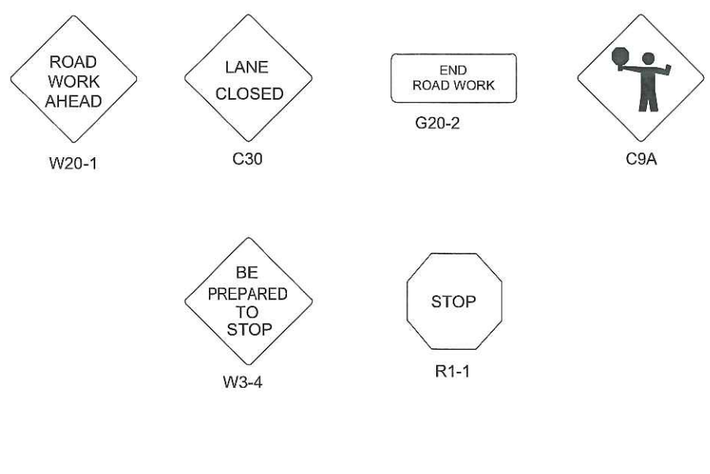


GENERAL TRAFFIC CONTROL NOTES

TRAFFIC SHALL CONFORM TO THE CALIFORNIA MANUAL ON UNIFORM TRAFFIC CONTROL DEVICES (MUTCD) AND 2006 CALTRANS STANDARDS.

NO LANE CLOSURES PERMITTED BEFORE 9:30A AND AFTER 3:30P

ACCESS TO DRIVEWAYS SHALL BE MAINTAINED AT ALL TIMES

ONE LANE OF TRAFFIC IN EACH DIRECTION AND ALL HIGH VOLUME TURNING LANES SHALL BE MAINTAINED AT ALL TIMES ON ALL STREETS AT A MINIMUM LANE WIDTH OF 10 FEET.

ANY CONFLICTING SIGNS, STRIPING AND PAVEMENT MARKINGS SHALL BE REMOVED OR COVERED BEFORE TRAFFIC CONTROL IS IN PLACE. ANY SIGN, STRIPING OR PAVEMENT MARKING REMOVED OR COVERED SHALL BE REPLACED WHEN TRAFFIC CONTROL IS NO LONGER NECESSARY.

SAFE PEDESTRIAN ACCESS SHALL BE MAINTAINED AT ALL TIMES.

CHART A

MINIMUM RECOMMENDED DELINEATOR/CONE & SIGN PLACEMENT

| POSTED SPEED LIMIT (km/h) | TAPER LENGTH L (m) | DELINEATOR SPACING TAPER (m) | DELINEATOR SPACING TANGENT (m) | SIGN SPACING S ADVANCE OF TAPER & BETWEEN SIGNS (m) |
|---|---|---|---|---|
| 25 MPH (40) | 125 FT. (40) | 25 FT. (8) | 50 FT. (15) | 150 FT. (45) |
| 30 MPH (45) | 180 FT. (55) | 30 FT. (9) | 60 FT. (18) | 200 FT. (60) |
| 35 MPH (50) | 245 FT. (75) | 35 FT. (11) | 70 FT. (21) | 250 FT. (75) |
| 40 MPH (60) | 320 FT. (100) | 40 FT. (12) | 80 FT. (24) | 350 FT. (105) |
| * 45 MPH (70) | 540 FT. (165) | 45 FT. (14) | 90 FT. (27) | 550 FT. (170) |
| * 50 MPH (80) | 600 FT. (185) | 50 FT. (15) | 100 FT. (30) | 600 FT. (185) |
| * 55+MPH (85) | 1000 FT. (305) | 50 FT. (15) | 100 FT. (30) | 1000 FT. (305) |

SPEED LIMIT* →

* CONTRACTOR TO VERIFY ACTUAL SPEED LIMIT

CAL - TEL

BYERS ENGINEERING COMPANY
4780 CHABOT, SUITE 104
PLEASANTON, CA 94588
(925) 398-6010

| DESIGN | DRAWN | DESCRIPTION | REV | DATE |
|---|---|---|---|---|
| J.C. | D.A. | FOCA SECTION THROW | | 06/03/14 |

PROJECT: CAL-TEL FIBER REPLACEMENT SECTION
ADDRESS: SHELTON AND WIMER RDS. TO SHELTON RD.
AND LAWSON DR. SAN JOAQUIN / CALAVERAS COUNTY
CONSTRUCTION TYPE: AERIAL FIBER CONSTRUCTION
SITE: SAN JOAQUIN
SHEET: 8 of 8